Introduction
The Circuit Diagram
Alternative timebase circuit
Crystal timebase modification
Parts List
Clock builders' gallery

{gallery}binary/title{/gallery}

Welcome to the most popular page on my website! I receive more emails on this project than any other, and several people have sent me photographs of the versions they have built. Scroll down the page to see pictures of binary clocks built by other builders.

Some time after my Sidereal Clock project I built this simple novelty clock, which displays 24-hour time in binary.

All the parts for this clock came from scrap. The red LED's making up the display came from an old video player. The high brightness green LED was also from an old video player (a different one). The TTL logic chips were from old computer boards, with the possible exception of the 4518 counter chip, which was probably a left over spare from my Sidereal Clock project. The transformer came from an old audio cassette player. I later needed the 74LS393s elsewhere in my Z80 computer, which is why the photograph above is minus these chips (and obviously doesn't show the clock in working order!). The clock was built on pieces of plain matrix board, which has holes on a 0.1-inch pitch with no copper tracks. Connections are made using point to point solid-code wiring, using wires from old telephone cabling. This is my preferred construction method. I didn't ever get around to boxing this clock.

Binary Clock Kit

This kit uses a microcontroller, not discrete logic like my project here. It is available from one with other

on my page here Apple Mountain Electronic Kits and Curiosities . Visit our

Circuit Diagram

LEFT: My original hand-drawn circuit diagram (binary clock schematic).
MIDDLE: Computer drawn diagram, kindly sent to me by Steven Moughan .
RIGHT: Computer drawn diagram, kindly sent to me by Eugene Luca. Download Autocad (.dwg) file . See also circuit diagram as a pdf
.

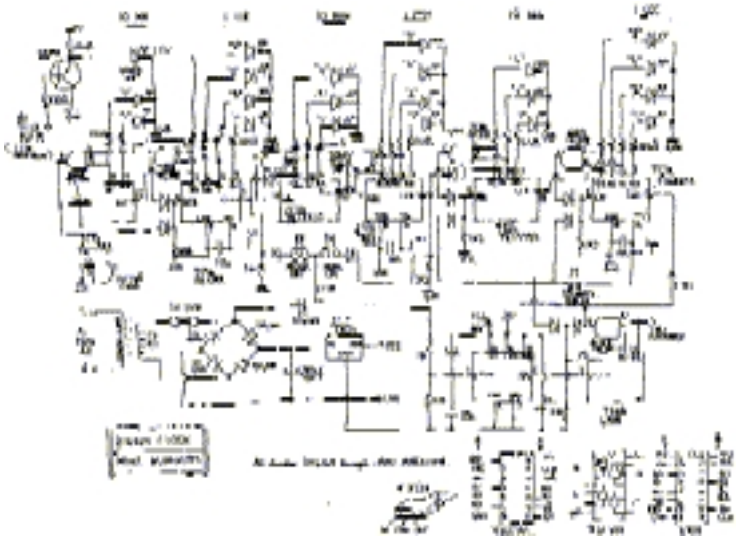

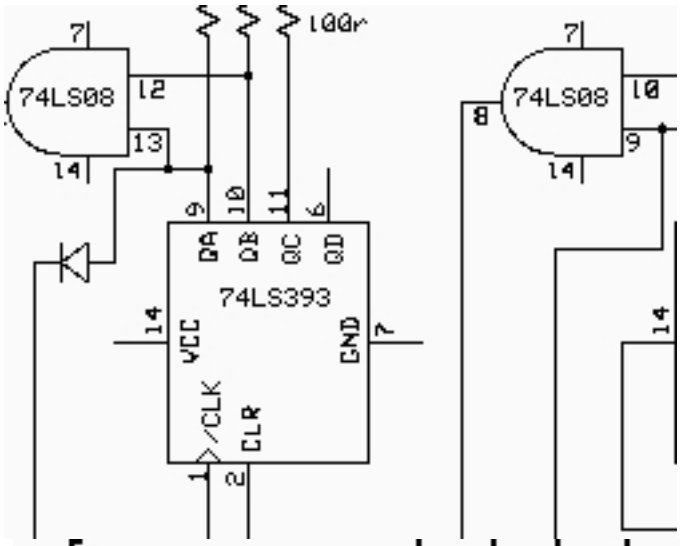

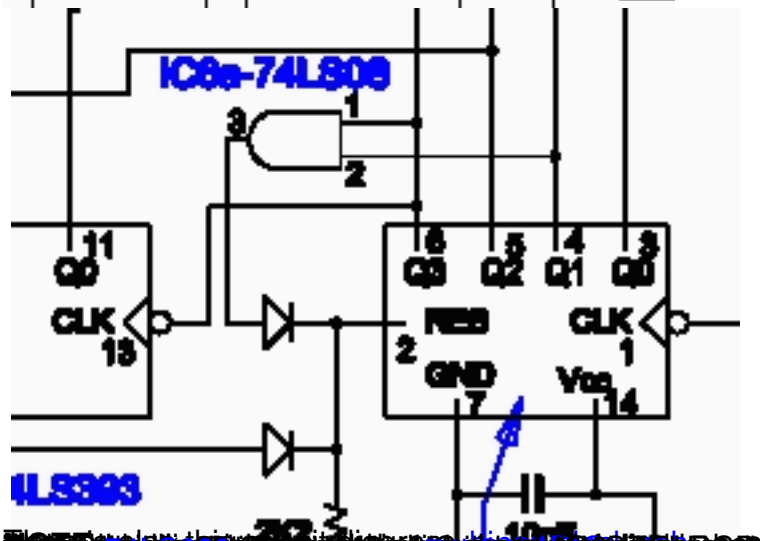

[redacted]

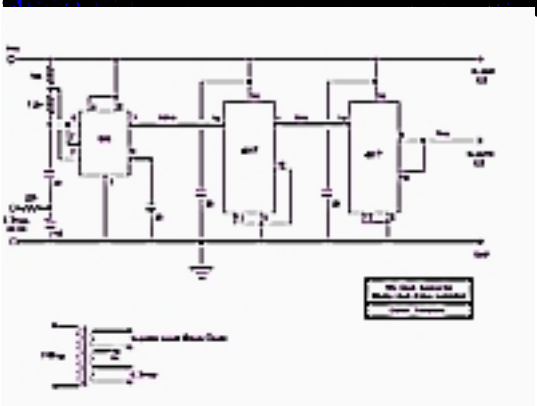

Alternative timebase circuit

Derek Tombrello had some difficulties with the timebase. It seems that a noisy local mains voltage caused his clock to run fast. He came up with an alternative way to extract a 1Hz pulse from his local (60Hz) mains frequency. CLICK HERE to view the circuit diagram. Scroll down the page to see photographs of Derek's clock.

Crystal timebase modification

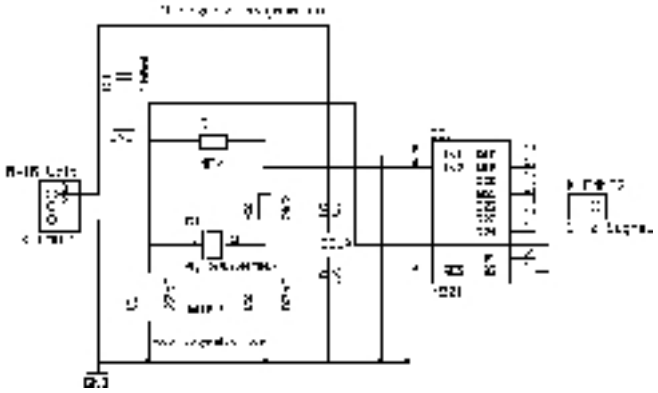

Martin Keller (Germany) sent me a modification to run the binary clock from a quartz crystal reference rather than using the 50Hz mains frequency. CLICK HERE to view the circuit diagram.

NOTE: A mains driven clock exhibits excellent long term accuracy since power companies ensure that any frequency deviations during the day due to demand variations are compensated for at a later time. Accurate atomic clocks are used for this purpose. However during the day, demand variations cause frequency deviations which mean that a mains driven clock can become several seconds fast or slow. By contrast, a crystal reference provides very good short term accuracy, but over time will tend to slowly gain or lose time. The crystal frequency can be slightly adjusted by making one of the capacitors variable, e.g. replace C1 in the diagram with a 50pF trimmer capacitor. This can be used to improve the long term accuracy but it's still not as good as a mains clock.

Parts List

NOTE: The 74LS08 and 74LS393 could be replaced by their more modern 74HC-series variants, i.e. 74HC08 and 74HC393. The latter are cheaper, more easily available (nowadays) and have lower power consumption. If you do this, then you can replace the 2K2 pulldown resistors wherever you see them, with something much higher e.g. 100K. There is also a 74HC4518 if you can find it, but if not then the plain old CMOS 4518 is still perfectly Ok.

Quantity	Part	Description
3	74LS393	IC1, IC2, IC3: Dual 4-bit binary counter
1	4518	IC4: Dual BCD counter
2	74LS08	IC5, IC6: Quad 2-input AND gate
1	7805	IC7: 1A, +5V voltage regulator
1	BC108	Transistor

14	1N4148	Diodes
4	1N4001	Rectifier diodes
20	5mm Red LED	LED's for time indication
1	5mm Green LED	LED for second flasher
21	100 ohm	Current limiting resistors for LED's
5	2K2	Resistors
2	10K	Resistors
1	1K	Resistors
1	820 ohm	Resistor
1	470 uF	Electrolytic capacitor
5	10 nF	Ceramic capacitors
1	6V secondary	Small transformer
1	1A	Fuse
3	Push buttons	Switches for time setting
1	Matrix Board	For construction of the circuit

The photos below have been sent to me via email from other binary clock builders. If you've built this project too, why not email me a photo for the gallery! Please click the photos to view full size versions.

Peter Albeda PA3EEP, Gouda, The Netherlands {gallery}binary/p1{/gallery}
Jeremy Balogh, EE Student at Nother Illinois University, USA {gallery}binary/p2{/gallery}
Bulent Uysaler also provided a nice PCB layout. I have .DXF and .PCB files available if you need them, Click here to download them: p3.dxf , p3.pcb (you need PCAD to view these files), and
p3.pdf
. Bulent even sent me a
short video of the clock in operation
! {gallery}binary/p3{/gallery}
Derek Tombrello. See also his alternative 1Hz circuit . {gallery}binary/p4{/gallery}
Jacob Toft Pedersen, Denmark {gallery}binary/p5{/gallery}
Oscar García, José Luis Solís, Armando Rodríguez, students of the Mechanical and Electrical Engineering college in Monterrey, Mexico. This is the final year project of their course. {gallery}binary/p6{/gallery}
Stuart Metcalf, UK. Visit Stuart's Blog for more information and photos.
Eben Rauhut, Cranford, New Jersey, USA {gallery}binary/p8{/gallery}
Ivo Naumovski from Macedonia says: "some time ago surfing I've come across your binary clock and immediately know I have to build this, because it's so cool. So I did build it using Bulent Uysaler PCB layout and it works excelent. thanks for the schematic!" {gallery}binary/p9{/gallery}
Göblyös János from Hungary, uses a microcontroller instead of discrete logic. {gallery}binary/p11{/gallery}
Felix Engel, Germany. Visit http://2501.fcenet.de/site/misc/binaryClock.htm for more information and photos. {gallery}binary/p12{/gallery}
Didier Salembier, Belgium built this true-binary clock which is described as an Open Source

project . He writes:

"This binary clock gives you the exact hour in full-binary (no BCD!) and is driven by a 1MHz-oscillator. The hardware is very simple: only one MAX7000s (programmable logics) programmed with Quartus (free to use with weblicense). The source-code to upload into the EPM7064SLC44 (a /10-version is more then fast enough!) can be found on the website you see on top of this email and the hardware itself is just the basic hardware: connect the supply, the LEDs, the switches and the oscillator and enjoy your binary clock :-)

"On the same website you will also see the previous releases and the problems I encountered. You will also see I'm planning to make a brand new binary clock with an AVR instead of a MAX7000s, using DCF77 or the internet to adjust the clock.

"I've demolished an old alarm clock, I use the snooze-button to set the hour and I use the battery-place to upload new firmware into the clock. The D's and the C are not in use anymore (that was just a try-out)". {gallery}binary/p10{/gallery}
Virgil Ryan Bartolome (and friends) from The Philippines, built this very nice student project. {gallery}binary/p13{/gallery}